Date _____

P.O. # _____

RedArt Inc. 2267 Via Burton St. Anaheim, CA 92806 Ph.714.774.9444 Fax.714.774.2244

Customer	Phone No.
Street Address	Fax No.
City, State, Zip	Vehicle

A - Seat Style **Quantity**_____ **Approved by** _____ **CC#**_____ **exp.**_____

- [x] **RX -1**
- [ ] **RX -2**
- [ ] **ENDURO**
- [ ] **SUPER**
- [ ] **STREET**
- [ ] **SUPER KID**
- [ ] **ULTRA**
- [ ] **ULTRA PRO**
- [ ] **ULTRA PRO II**
- [ ] **ULTRA SPORT**
- [ ] **SPORTSTER**
- [ ] **Lil' SPORTSTER**

Sec. Code_____
 # on back of card

B - Single Seat Options

- [ ] **B - Double Stitch, No Beading**
- [ ] BS - Belt Sealers
- [ ] C - Sportster Adj. Headrest
- [ ] CS - Crotch Slot
- [ ] EBS - Element Barrier System
- [ ] FBL - Front Belt Loop
- [ ] FS - Flame Stitch
- [ ] G - Sportster Headrest
- [ ] GP - Grabber Patches
- [ ] HIF - High Impact Foam Seat
- [ ] HB - High Back
- [ ] L - Lo-Back
- [ ] LC - Loose Cushion
- [ ] LCFT - Loose Cusion Flat Top
- [ ] LC- HIF - Loose Cushion, w/ High Impact Foam
- [ ] LS - Lumbar Support
- [ ] **PD - Pocket, Deluxe, Pleated Design w/ Zipper Closure**
- [ ] **R - Adjustable Headrest**
- [ ] **S - Sport Pleat**
- [ ] SBS - Shoulder Belt Slot
- [ ] SC - Short Cushion
- [ ] SD - Sand Drain
- [ ] SH - Seat Heater
- [ ] SL - Shoulder Loops
- [ ] SS - Speaker Seat
- [ ] T - Extra Tall, 3" Back + 1" Headrest
- [ ] TRI - Tri-Color Insert
- [ ] W - Extra Wide, 2" Wider all Models

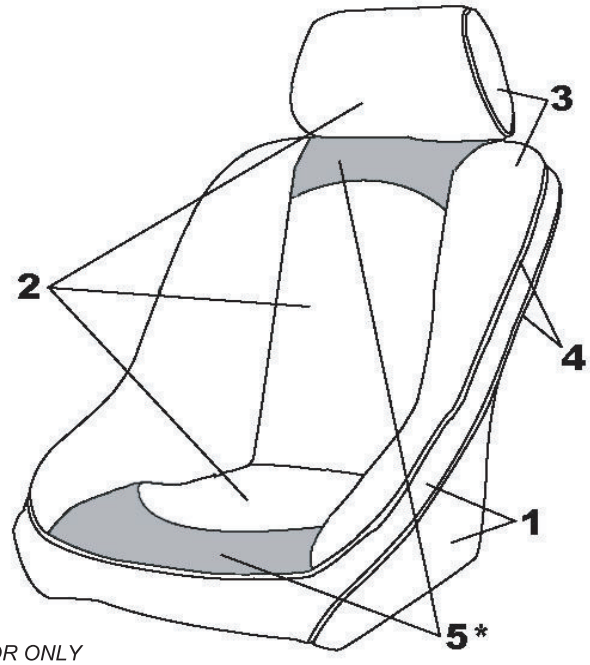

C - Fabric Call-out

1 BACK (OUTSIDE)	
2 CENTER (INSERT)	
3 ARMS (WINGS)	
4 PIPING * N/A in B - Option	
5* Top & Front Panel	

**LEATHER & TRI-COLOR ONLY*

A - Bench Style [ ] Standard [ ] Sportster **Quantity**_____ **Bench Length** _____ *in.* **Passengers** (2) or (3)

B - Bench Seat Options

- [ ] **B/B - Double Stitch, No Beading**
- [ ] BH - Fixed Headrest
- [ ] BHF - Full Fixed Bench Headrest
- [ ] BHU - Fixed Headrest Ultra
- [ ] BS - Belt Sealers
- [ ] C - Sportster Adj. Headrest
- [ ] CS - Crotch Slot
- [ ] EBS/B - Element Barrier System
- [ ] FBL - Front Belt Loop
- [ ] FS - Flame Stitch
- [ ] GP - Grabber Patches
- [ ] L - Lo-Back
- [ ] **R - Adjustable Headrest** (2) or (3)
- [ ] **S - Sport Pleat**
- [ ] SBS - Shoulder Belt Slot
- [ ] SC - Short Cushion
- [ ] SH - Seat Heater
- [ ] SL - Shoulder Loops
- [ ] SS - Speaker Seat
- [ ] TRI - Tri-Color Insert
- [ ] **U - Bucket Style Bench**

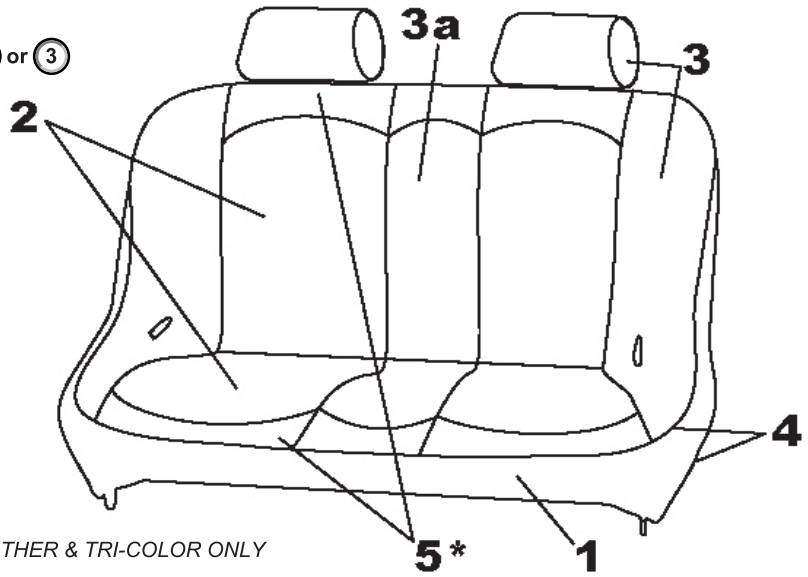

C - Fabric Call-out

1 BACK (OUTSIDE)	
2 CENTER (INSERT)	
3 ARMS (WINGS)	
3a *Available in Leather & U - Option Only*	
4 PIPING * N/A in B - Option	
5* Top & Front Panel	

**LEATHER & TRI-COLOR ONLY*

QTY	P/N	DESCRIPTION	QTY	P/N	DESCRIPTION

Click Here to Send